BIONTEC

biontec.ch

We develop and produce bionic moulded parts in series. Made of carbon. Just like in nature.

EN

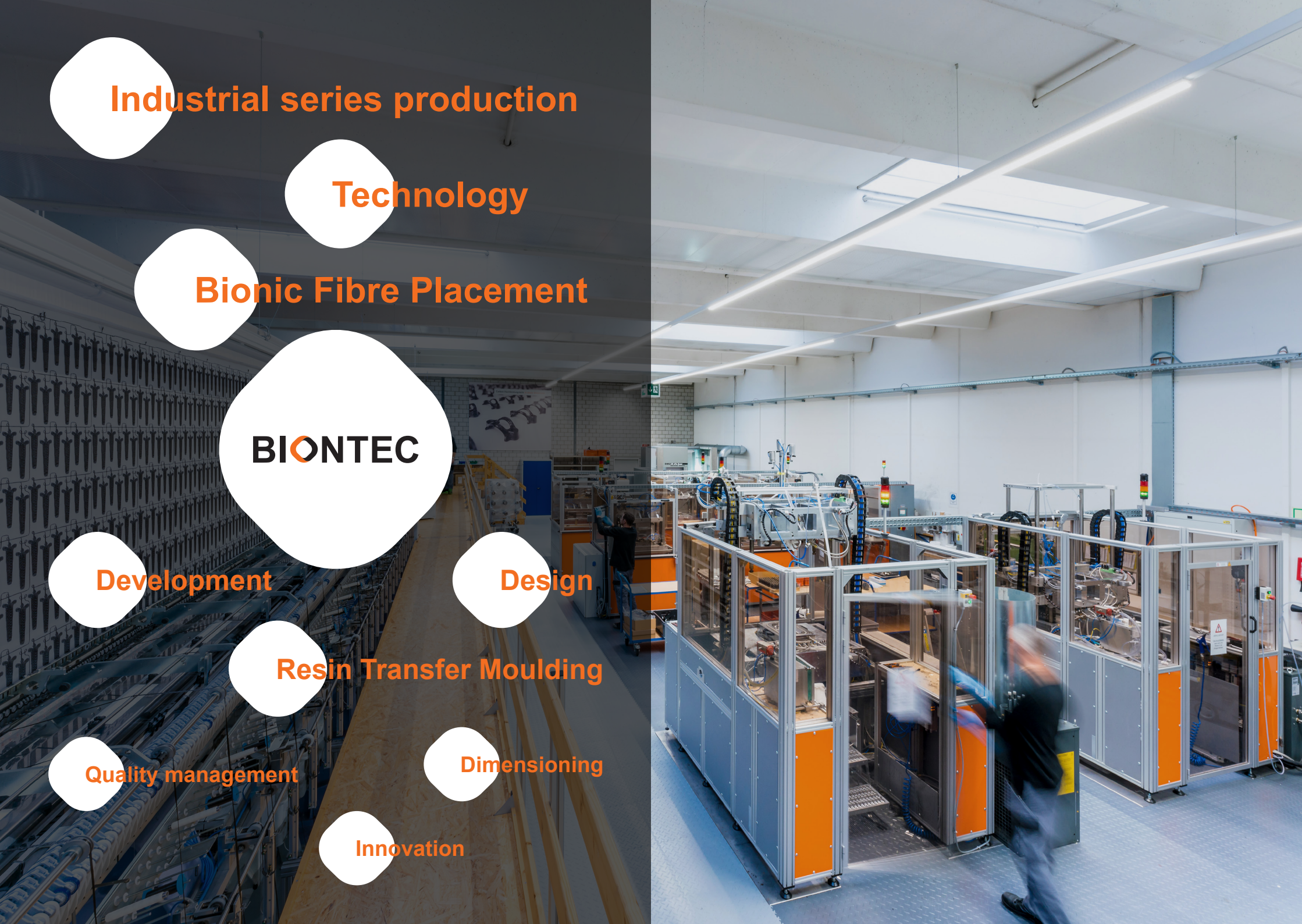
Industrial series production
Technology
Bionic Fibre Placement
BIONTEC
Development
Design
Resin Transfer Moulding
Quality management
Dimensioning
Innovation

Technology

From the fibre to the finished part, our process chain makes optimal use of the properties of the material and also enables immense freedom of design possible for your moulded composite parts. Bionic fibre placement and an automated injection process using resin transfer moulding (RTM) deliver the maximum performance at an economic price.

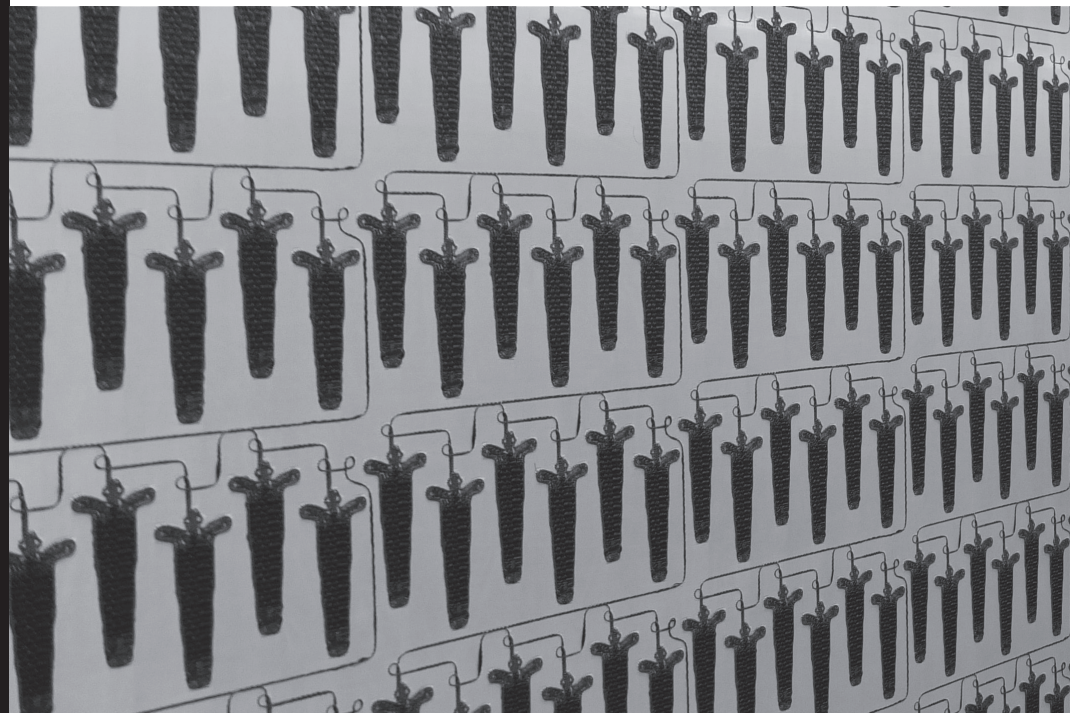

Tailored Fibre Placement

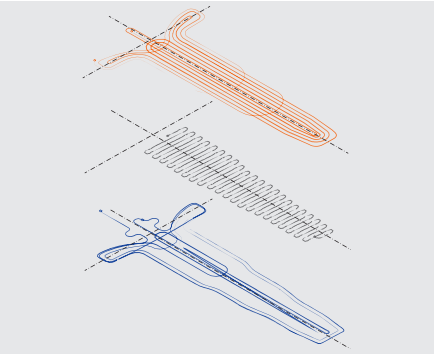

- Load path aligned fibre placement using industrial embroidery machines (TFP)
- Local reinforcement of critical areas
- Produced to the final contour with no cut-offs making the part cost-efficient and sustainable

Preforming

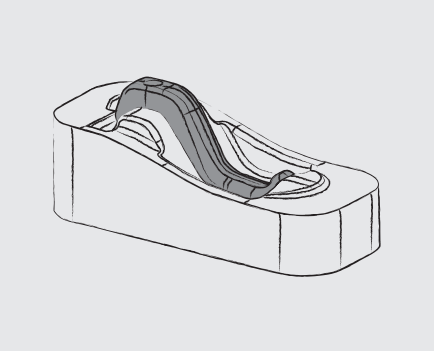

- Fully assembled 2D semi-finished products that can withstand the required loads
- Composite textile pieces are put together just like a 3D puzzle
- Optionally with a core material (e.g. foam) or integration of inserts for load transmission

Resin Transfer Moulding

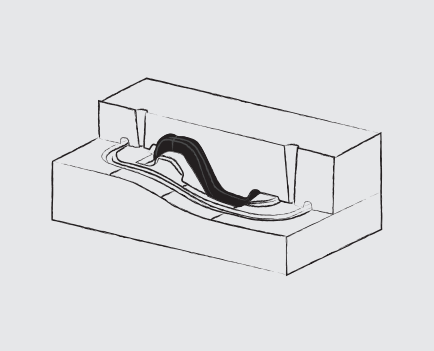

- Complex geometries in one single process
- High dimensional accuracy
- Off-tool parts with good surfaces

Lightweight construction
The potential offered by carbon is huge. It makes all kinds of applications in lightweight construction possible. See for yourself!

Stiffness
If precision and accuracy are what is needed to deliver the decisive advantage, stiff moulded CFRP parts are the best choice.

Fatigue strength
Carbon offers a decisive advantage for many dynamic applications.

Damping
Avoid material fatigue and wear due to vibrations – thanks to targeted damping using composites.

Thermal expansion
Carbon can ensure you always have consistent measurement results thanks to its low thermal expansion.

Radiolucency
Structures that let through various types of radiation (X-rays, MRI, radio waves) can be produced using the right fibres.

Chemical resistance
The chemical resistance of composites means that they can be used as a substitute for stainless steel in many applications.

Benign failure
Through special processing of the composite and due to the architecture of the fibres, we are able to make sure that the structure only fails gradually.

Integral design
By using composite materials, it is possible to realise complex part designs and reduce the number of components.

Integration of functions and electronics
Alongside traditional functions, electronic components can also be integrated into composites.

Freedom of design and aesthetics
Carbon parts are organic and elegant. Carbon stands for high-tech and lifestyle. The innovative technologies from BIONTEC enable new design options for your products.

Sustainability
Thanks to the bionic fibre placement, material is only used where it is needed. Thus, the environment is taken care of.

Development

As a reliable supplier for your parts and an all-round partner, we support you in the realisation of your product from the initial idea through to series production. Benefit from our in-depth knowledge and innovative ideas.
We focus just as much on your specifications as on the right production processes for your product (design for manufacturing).

- Development of the concept and complete assembly

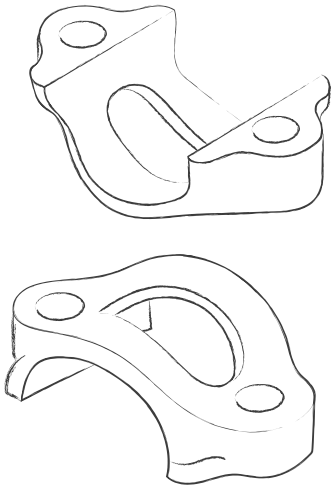

- Design and construction

Innovation

In order to implement your ideas, we develop innovative solutions. To this end, we continuously test new materials together with our customers – e.g. bio-based resin systems, special fibre types or cost-efficient core systems. In addition, we develop new processes to offer you new design possibilities and functionalities. One example is the integration of electronic components directly into the parts.

- Dimensioning

- Prototypes and validation

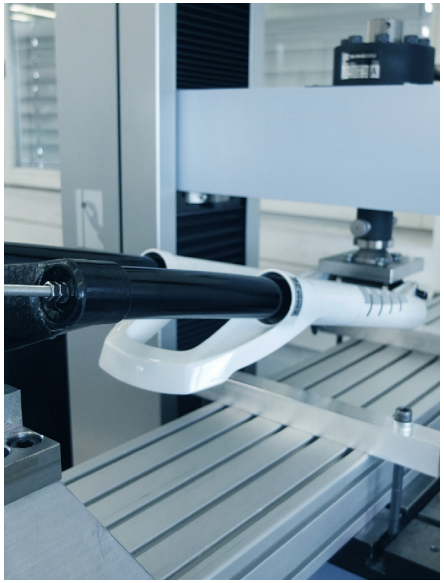

Industrial series production

Whether you need load path aligned fibre layup, complex three-dimensional preforms or composite parts including attachments and finishing: Our automated and robust processes guarantee first-class quality across the entire component portfolio at all times – quality that pays off and that you can rely on. We work together with you to define the required quality criteria for each and every product and meticulously test according to them.

Parts

2D or 3D preforms

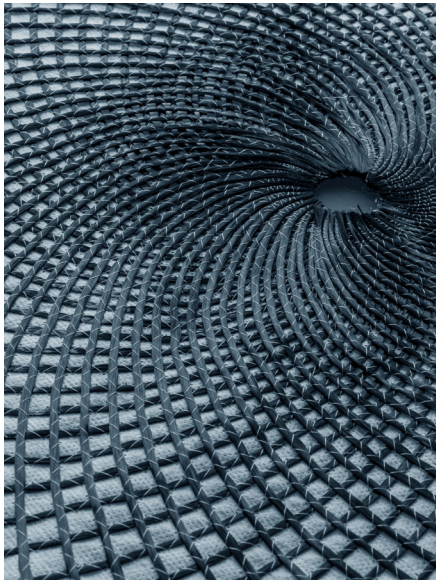

Mechanical engineering
We can help you to significantly improve the performance of your machines: by reducing the weight or improving the stiffness or damping properties.

Metrology
Precision is the most important thing in metrology: something that our composite solutions deliver at the highest level.

Medical technology
Radiolucent equipment and tools for medical examinations. Lightweight orthopaedic aids for patients.

Aviation
Weight reductions help to lower fuel consumption: We produce complex parts cost effectively.

Space travel
Minimal weight, maximum reliability: We supply complex parts for science and new space applications.

Mobility
CFRPs reduce energy consumption in the mobility sector and in passenger and freight transport.

Sport and leisure
You will really hit the mark with solutions from BIONTEC: lightweight carbon parts with excellent performance and elegant design.

Other sectors
Composites can be used for a diverse range of applications. Get in touch with us.

From haute couture to high-tech: Our journey to the automated series production of composite products began with the traditional St Gallen embroidery of the 19th century. Today we develop and produce innovative moulded parts. Bionic. Made of carbon. Efficient lightweight construction, just like you find in nature.

Do you have a complex problem to resolve?
Let's talk about it!
Get in touch with us.

BIONTEC | Bionic Composite Technologies AG
Flurhofstrasse 150 | 9000 St. Gallen | Switzerland
+41 71 242 72 00 | composites@biontec.ch | **biontec.ch**